State of the Union

Krste Asanovic
Chief Architect, RISC-V International

RISC-V Summit
Santa Clara, California
October 23, 2025

The State of the Union is strong!

Solidly established in embedded space

On verge of widespread adoption in application processors

The standard base for new AI accelerators

Increasing industry realization that open-standard RISC-V will be the dominant future ISA

RISC-V move into industry verticals

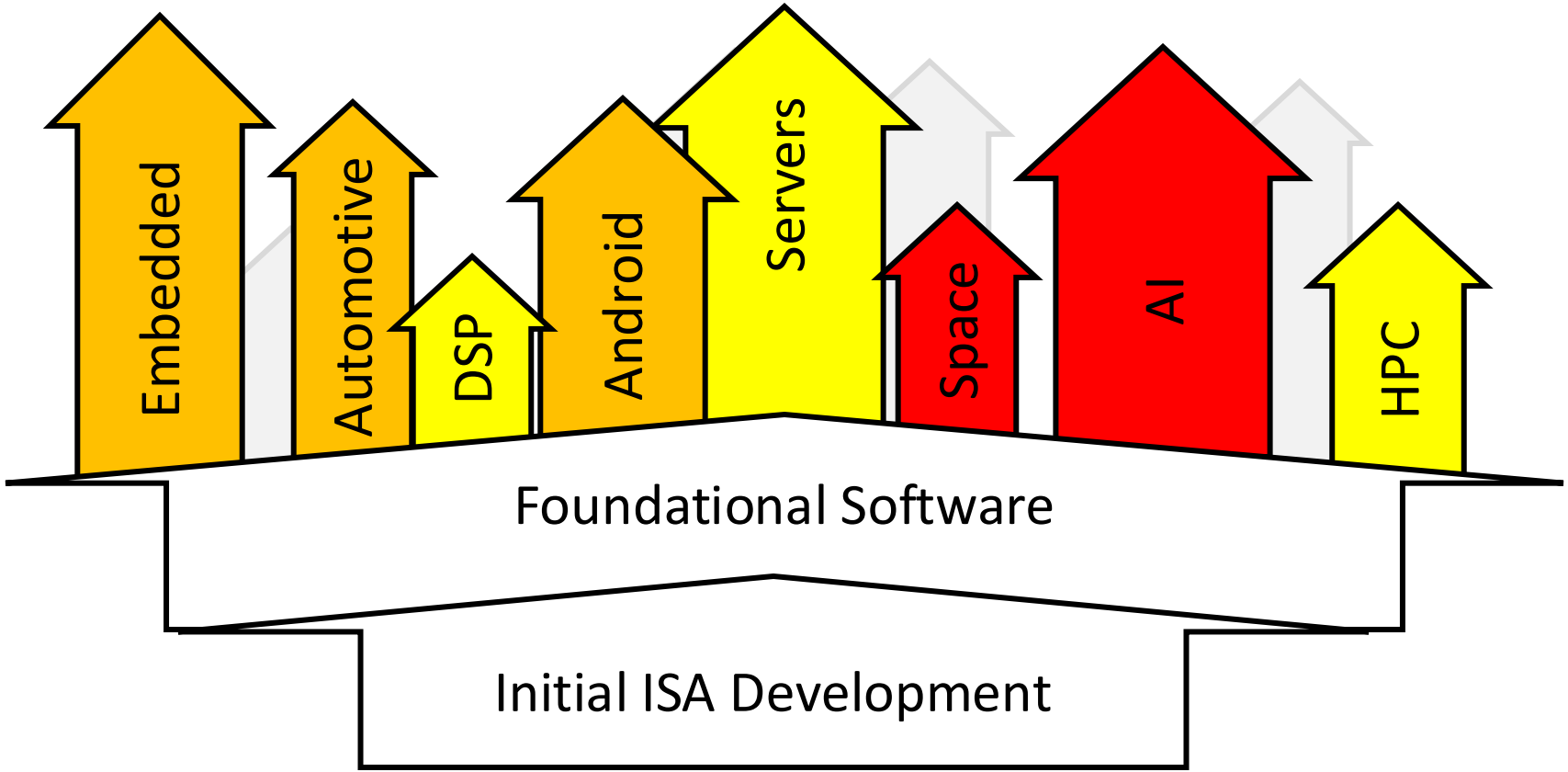

Attacking each Vertical

- Begin with common ISA and foundational software baselines
- Work with relevant software ecosystem partners
  - Work is done at RVIA in SIGs (members only) and Joint Working Groups (include non-member ecosystem partners)
- Porting and RISC-V tuning of key frameworks and libraries needed to ascertain gaps and opportunities
- Can only be successful by having complete solution for each vertical, so need to prioritize RVIA bandwidth
  - TSC and BoD gathering feedback from members
- Vertical efforts benefit from leveraging commonality across whole RISC-V universe, ensuring common evolution of components

RVA Profile Progress

- RVA23 was last major release in RVA profile family, ratified October 2024
- First minor release , RVA23p1, in progress, adds supervisor options:

s://riscv.atlassian.net/browse/RVS-3647

Extension	Option Classification
Svrsw60t59b (PTE reserved-for-software bits)	Development
Ssdbltrap (Double Trap)	Development
Sscfg (Supervisor Counter Delegation)	Development
Ssctr (Control Transfer Records, CTR) $	Expansion †
Ssqosid (QoS identifiers)	Expansion

- Expect 1-2 RVA23 minor releases per year, as options are ratified
- Next RVA major release, tentative name RVA30, will have new mandates
  - Not expected for another few years, to give community time to digest RVA23.

Other Profiles

- Updates in RVB23p1 happen to match RVA23p1
  - not necessarily true in future minor releases

- Work in progress to define a microcontroller profile RVM (draft RVM23 available), and a “processor subsystem”, and automotive MCU standard

- Also, CHERI profiles are being defined.

RISC-V New Security Extensions in Progress

- SPMP
  - Provide S-mode RTOS/supervisors with protection from U-mode tasks
- RISC-V Worlds
  - Provide secure global partitioning of devices on SoCs
- IOPMP
  - Embedded device security
- Supervisor Domains
  - Flexible support for confidential computing and other applications
- CHERI
  - New base ISAs (RV32Y/RV64Y) bringing capabilities to RISC-V
- Lightweight Memory Tagging
  - Improve memory safety, building upon pointer-masking support
- Additional Crypto
  - PQC, and other vector crypto enhancements

RISC-V DSP extensions

- RISC-V P extension
  - Long development time, but now stable on path to ratification
  - Packed integer/fixed-point (8b/16b/32b/64b) operations on integer **x** registers
  - Over 100 new instructions

- Upcoming RISC-V vector DSP extension, TG initiated
  - Add DSP instructions on **v** registers
  - Candidate new instructions for greater fixed-point support, permutations for FFTs, complex arithmetic support, …

Long (>32b) Instructions

- RISC-V ISA included variable-length instructions from beginning
  - Compressed instructions (16b) save code-size
- RISC-V designed for long-term success, won't disappear due to owner changing business model or folding.
  - Fixed 32b instruction format would be barrier to long-term evolution. Other fixed-width 32b ISAs already running out of encoding room.
  - Longer instructions (>32b) also help reduce code size, improve performance, and support ever-growing number of new operators and datatypes
- New TG being formed to finalize encoding format and first long instructions

RISC-V and AI

- RISC-V supports a general computing model allowing a balance of scalar, vector, and matrix capabilities
  - Same cores can run non-AI portion of application as well as AI portion, simplifying software, lowering latency, and increasing utilization
  - Can scale to arbitrarily high performance with scale-up+scale-out multicores
  - New models can run reasonably well on RISC-V hardware designed for earlier models
  - Different balance of scalar/vector/matrix possible with different microarchitectures in current or future generations of RISC-V, without changing programming model

RISC-V AI Vector Datatypes

- Proposal (Zvfbfa) for additional support for BF16 vector arithmetic
- Proposal (Zvfofp8min) for OFP8 support through conversions

- Proposal for RISC-V unified approach to ”bulk normalization” for low-precision floating-point dot-products that are central to all AI algorithms and related ISA extensions

- Continual flow of new AI datatypes, which we need to address in rational way

RISC-V Matrix Extensions

- Matrix multiply (matmul) instructions can provide large speedups on key compute in portions of AI applications
- Across universe of RISC-V implementations and application domains, different matmul microarchitectures make sense, and may result in different ISA choices (or no matmul at all)
- Only a relatively small number of matrix multiply routines exist, so software less affected by ISA choices

RISC-V Matrix Extensions, 1+3 Approaches

Element in existing RVV vector register

Element in added matrix registers

Zvbdota Fast-Track

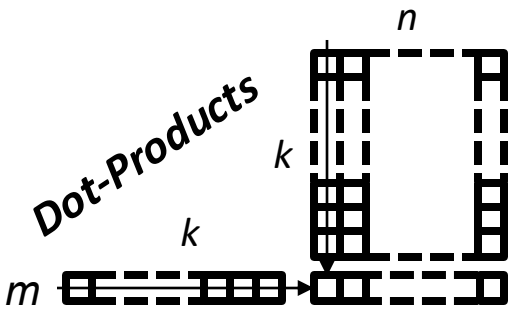

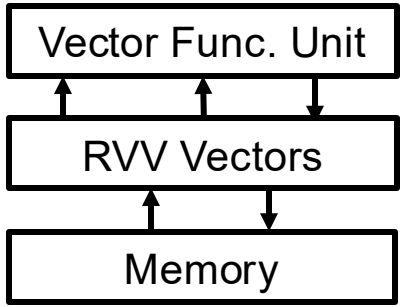

IME TG

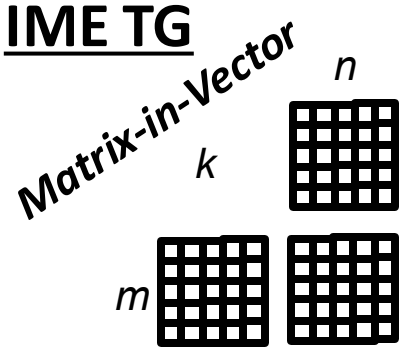

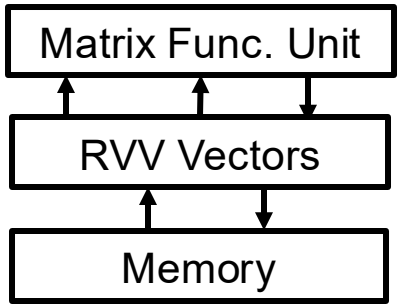

VME TG

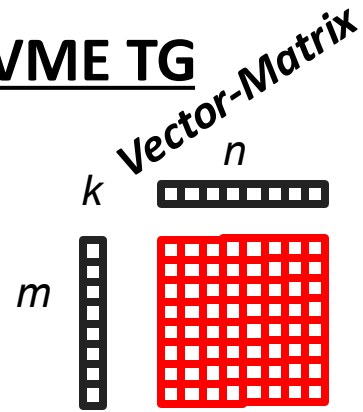

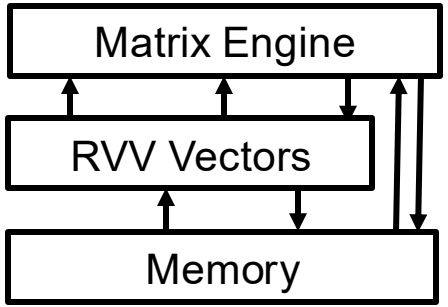

AME TG

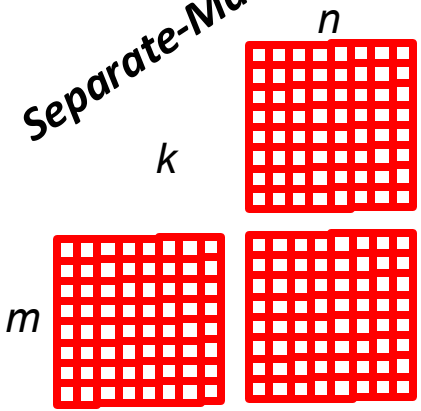

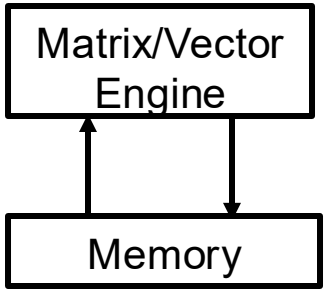

Alternative Matrix Instruction Extensions

- **Dot-Products:** No additional matrix state. Small and effective extension at smaller vector lengths, also meets some DSP needs, but doesn't scale performance with larger vector lengths.
- **Matrix-in-Vector:** No additional matrix state. Allows larger throughputs than dot-products for longer vector lengths.
- **Vector-Matrix:** Add matrix state to processors that already have RVV. Maintains vector ISA and memory model.
- **Separate-Matrix:** Unconstrained matrix and vector design.

Summary

- RISC-V foundational components in place and working well
- RISC-V moving into verticals, each vertical will need focused effort to engage ecosystem and fill gaps in ISA or software support, while keeping coherent overall ISA design
- RISC-V well-suited to current and future AI needs. Matrix extensions possibly liveliest part of RISC-V standards development, but making constructive progress.